Electrolux PROFESSIONAL

Modular Cooking Range Line 900XP One Well Gas Fryer 15 liter

ITEM #

MODEL #

NAME #

SIS #

AIA #



391077 (E9FRGD1GF0) 15-lt gas Fryer with 1 "V" shaped well (external burners), 1 basket and lid included

Short Form Specification

Item No.

High efficiency 14 kW burners in stainless steel. Suitable for natural gas or LPG. Deep drawn V-shaped well. Oil drains through a tap into a container under the well. Height adjustable feet in stainless steel. Exterior panels in stainless steel. Worktop in 20/10, stainless steel. Right-angled side edges eliminate gaps and possible dirt traps between units.

Main Features

- Deep drawn V-Shaped well.
- High efficiency 14 kW burners in stainless steel with flame failure device attached to the outside of the well.
- Thermostatic regulation of oil temperature up to a maximum of 190 °C.
- Flame failure device on each burner.
- Overheat protection thermostat as standard on all units.
- Oil drains through a tap into a drainage container positioned under the well.
- All major compartments located in front of unit for ease of maintenance.
- Piezo spark ignition for added safety.
- The special design of the control knob system guarantees against water infiltration.
- Unit delivered with four 50 mm legs in stainless steel as standard (all round Stainless steel kick plates as option).
- Supplied as standard with 1 basket and 1 right side door for cupboard.
- Optional portable oil quality monitoring tool (code 9B8081) for efficient oil management.

Construction

- Unit is 930 mm deep to give a larger working surface area.
- All exterior panels in Stainless Steel with Scotch Brite finishing.
- Model has right-angled side edges to allow flush fitting joints between units, eliminating gaps and possible dirt traps.
- Interior of well with rounded corners for ease of cleaning.
- IPX5 water resistance certification.

Included Accessories

- 1 of Door for open base cupboard — PNC 206350
- 1 of 1 full size basket for 14/15lt fryers — PNC 921691

Optional Accessories

- Junction sealing kit — PNC 206086 ❑
- Draught diverter, 120 mm diameter — PNC 206126 ❑
- Matching ring for flue condenser, 120 mm diameter — PNC 206127 ❑
- Flanged feet kit — PNC 206136 ❑
- Frontal kicking strip for concrete installation, 400mm — PNC 206147 ❑
- Frontal kicking strip for concrete installation, 800mm — PNC 206148 ❑

APPROVAL:

• Frontal kicking strip for concrete installation, 1000mm	PNC 206150	❑
• Frontal kicking strip for concrete installation, 1200mm	PNC 206151	❑
• Frontal kicking strip for concrete installation, 1600mm	PNC 206152	❑
• Pair of side kicking strips for concrete installation	PNC 206157	❑
• Frontal kicking strip, 400mm (not for refr-freezer base)	PNC 206175	❑
• Frontal kicking strip, 800mm (not for refr-freezer base)	PNC 206176	❑
• Frontal kicking strip, 1000mm (not for refr-freezer base)	PNC 206177	❑
• Frontal kicking strip, 1200mm (not for refr-freezer base)	PNC 206178	❑
• Frontal kicking strip, 1600mm (not for refr-freezer base)	PNC 206179	❑
• Pair of side kicking strips (not for refr-freezer base)	PNC 206180	❑
• 2 panels for service duct for single installation	PNC 206181	❑
• 2 panels for service duct for back to back installation	PNC 206202	❑
• Kit 4 feet for concrete installation (not for 900 line free standing grill)	PNC 206210	❑
• Sediment tray for 15lt fryers	PNC 206235	❑
• Oil drain pipe for 15lt free standing fryer	PNC 206301	❑
• Chimney upstand, 400mm	PNC 206303	❑
• Back handrail 800 mm	PNC 206308	❑
• Back handrail 1200 mm	PNC 206309	❑
• Flue condenser for 1/2 module, 120 mm diameter	PNC 206310	❑
• Door for open base cupboard	PNC 206350	❑
• Base support for feet or wheels - 400mm (700/900)	PNC 206366	❑
• Base support for feet or wheels - 800mm (700/900)	PNC 206367	❑
• Base support for feet or wheels - 1200mm (700/900)	PNC 206368	❑
• Base support for feet or wheels - 1600mm (700/900)	PNC 206369	❑
• Base support for feet or wheels - 2000mm (700/900)	PNC 206370	❑
• Rear paneling - 600mm (700/900XP)	PNC 206373	❑
• Rear paneling - 800mm (700/900)	PNC 206374	❑
• Rear paneling - 1000mm (700/900)	PNC 206375	❑
• Rear paneling - 1200mm (700/900)	PNC 206376	❑
• Chimney grid net, 400mm (700XP/900)	PNC 206400	❑
• Base support for feet or wheels - 600mm (700/900)	PNC 206431	❑
• Kit G.25.3 (NI) gas nozzles for 900 fryers	PNC 206467	❑
• 2 side covering panels for free standing appliances	PNC 216134	❑
• 1 full size basket for 14/15lt fryers	PNC 921691	❑
• 2 half size baskets for 14/15lt fryers	PNC 921692	❑
• Filter for fryer oil collection basin for 7lt, 14lt, 15lt free standing fryers	PNC 921693	❑
• Unclogging rod for 15lt fryers drainage pipe	PNC 921695	❑
• Deflector for floured products for 15lt fryers	PNC 921696	❑
• Pressure regulator for gas units	PNC 927225	❑

The company reserves the right to make modifications to the products without prior notice. All information correct at time of printing.

Modular Cooking Range Line
900XP One Well Gas Fryer 15 liter

Front

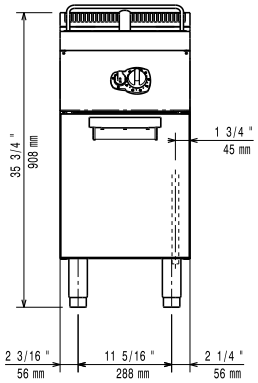

Side

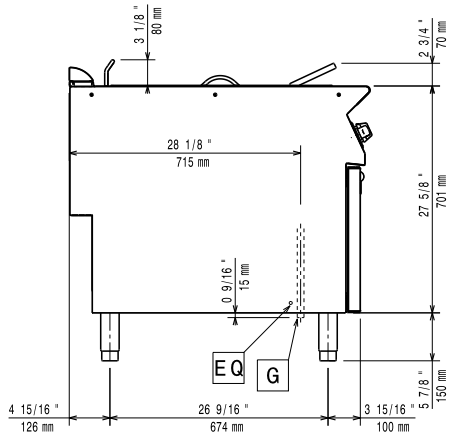

EQ = Equipotential screw
G = Gas connection

Top

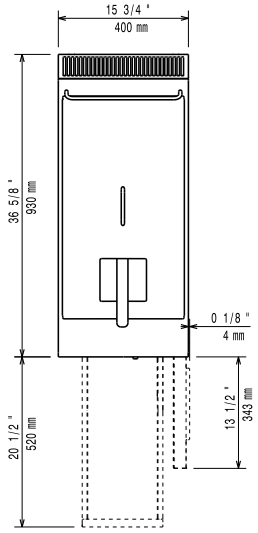

Gas

Gas Power:	14 kW
Standard gas delivery:	Natural Gas G20 (20mbar)
Gas Type Option:	LPG
Gas Inlet:	1/2"

Key Information:

Usable well dimensions (width):	240 mm
Usable well dimensions (height):	505 mm
Usable well dimensions (depth):	380 mm
Well capacity:	13 lt MIN; 15 lt MAX
Thermostat Range:	120 °C MIN; 190 °C MAX
Net weight:	50 kg
Shipping weight:	65 kg
Shipping height:	1080 mm
Shipping width:	460 mm
Shipping depth:	1020 mm
Shipping volume:	0.51 m³
[NOT TRANSLATED]	N9FG1

If appliance is set up or next to or against temperature sensitive furniture or similar, a safety gap of approximately 150 mm should be maintained or some form of heat insulation fitted.

The company reserves the right to make modifications to the products without prior notice. All information correct at time of printing.

2026.11.20